Snap-Action Float Sensor RF

for sensing water levels

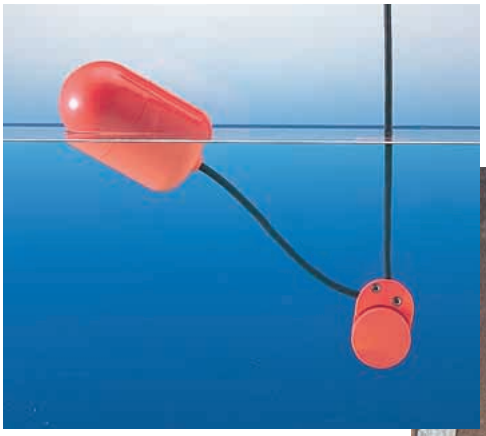

Features

- Detecting cut-in and cutout water levels with single float
- Snap on-off action ensures stable operations in clean water, wastewater or liquids containing suspended matter or oil and fat
- Hanging length readily adjustable with cable clamp

Applications

- Automatic pumping of water, wastewater, etc.
- For sensing alert water levels like high water level or lower water level

Dimensions and Structure (mm)

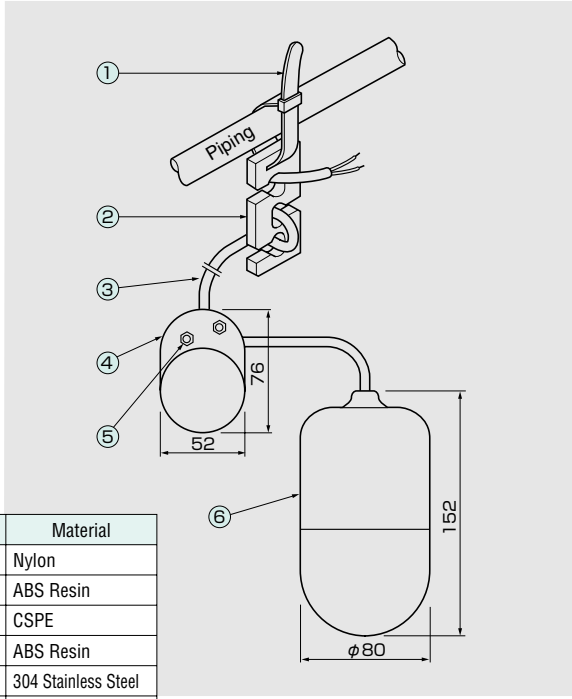

No.	Components	Material
1	Retaining belt	Nylon
2	Cable clamp	ABS Resin
3	Cable	CSPE
4	Intermediate weight	ABS Resin
5	Screw and nut	304 Stainless Steel
6	Float	ABS Resin

Standard Specifications

Item \ Model		RF-5
Electric characteristics	Breaking capacity	50VA AC
	Max. current	2A AC
	Working voltage	30V AC
Switch	Contact	"a" (normally-open)
	Type	Microswitch
Mechanical characteristics	Proof pressure (static)	98kPa (1.0 kgf/cm^2)
	Working temperature range	0 to 50°C
Level control		Min. 400mm, Max. 3,000mm
Cable	Cores × area	2×0.5mm^2
	Outside diameter	6.5mm
	Standard length	6, 10, 15, 20, 25, 30m
Weight		207g (Float only)